8mi bitové µP a µC IO řady PIC12x6...

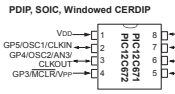

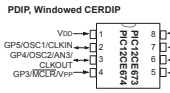

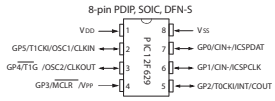

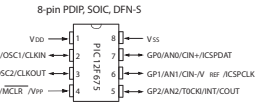

Obj.č.	TYP	Min.ks	Cena	Popis
1512491	PIC12C671-04/P	1	71,97	1Kx14 OTP 6I/O 4MHz DIP8
1512492	PIC12C671-04/SM	1	74,97	1Kx14 OTP 6I/O 4MHz SO8
1512494	PIC12C672-04/P	1	71,97	2Kx14 OTP 6I/O 4MHz DIP8
1512495	PIC12C672-04/SM	1	74,97	2Kx14 OTP 6I/O 4MHz SO8
1512870	PIC12CE674-04/P	1	84,97	2Kx14 OTP +EEPROM 4MHz DIP8
1518597	PIC12CE673-04/P	180	84,97	1Kx14 OTP +EEPROM 4MHz DIP8
1518598	PIC12F675-I/P	5	39,48	1Kx14 Flash 6I/O 20MHz DIP8
1518599	PIC12F675-I/SN	5	36,49	1Kx14 Flash 6I/O 20MHz SO8
1521400	PIC12F629-I/P	5	36,49	1Kx14 Flash 6I/O 20MHz DIP8
1521401	PIC12F629-I/SN	5	32,99	1Kx14 Flash 6I/O 20MHz SO8
1529995	PIC12F683-I/SN	5	43,48	2Kx14 Flash 6I/O 20MHz SO8 150mi

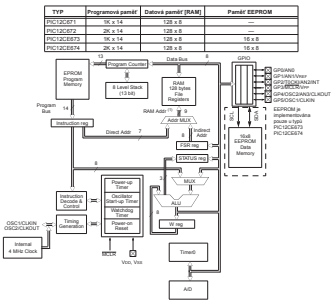

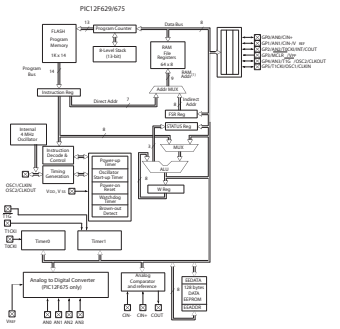

8mi bitové µP a µC IO řady PIC16C4...

Obj.č	TYP	Min.ks	Cena	Popis
1515821	PIC16C432-I/SS	134	107,29	2Kx14 OTP 12I/O 20MHz SSO20
1515823	PIC16C433-I/P	100	97,96	2Kx14 OTP 6I/O 10MHz DIP18
1515824	PIC16C433-I/SO	126	97,96	2Kx14 OTP 6I/O 10MHz SO18

8mi bitové µP a µC IO řady PIC16x5...

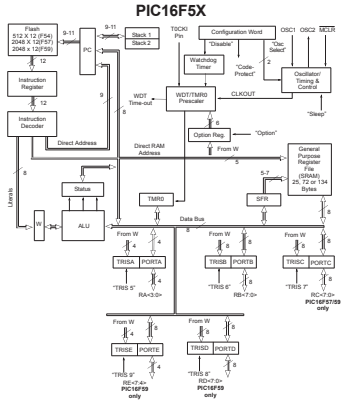

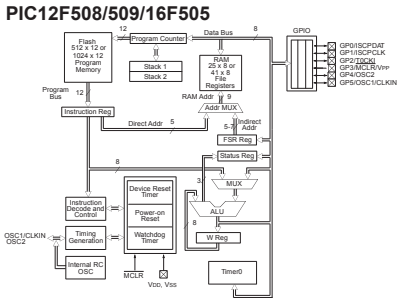

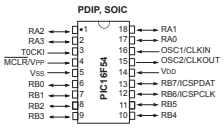

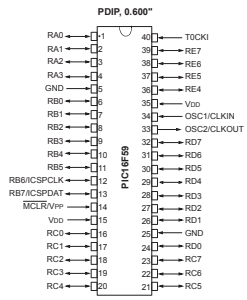

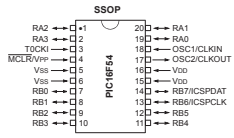

Obj.č.	TYP	Min.ks	Cena	Popis
1507211	PIC16C54HS/P	1	109,46	512x12 OTP 12I/O 20MHz DIP18
1507214	PIC16C55RC/P	225	125,95	512x12 OTP 20I/O RC 4MHz DIP28
1512871	PIC16C54C-04/P	5	57,48	512x12 OTP 12I/O 4MHz DIP18
1512876	PIC16C58B-20/P	1	73,97	2Kx12 OTP 12I/O 20MHz DIP18
1512881	PIC16C505-04/P	5	51,48	1Kx12 OTP 12I/O 4MHz DIP14
1515825	PIC16C54C-20I/P	5	62,47	512x12 OTP 20MHz -40/+85°C DIP18
1515827	PIC16C55A-20/P	1	78,97	512x12 OTP 20I/O 20MHz DIP28
1515829	PIC16C56A-20/P	1	69,97	1Kx12 OTP 12I/O 20MHz DIP18
1515830	PIC16C57C-20/P	1	91,96	2Kx12 OTP 20I/O 20MHz DIP28
1515831	PIC16C57C-20I/SO	180	105,96	2Kx12 OTP 20MHz -40/+85°C SO28
1518602	PIC16C54C-20I/SO	5	63,47	512x12 OTP 20MHz -40/+85°C SO18
1527009	PIC16F54-I/P	5	21,49	512x12 Flash 12I/O 20MHz DIP18
1527010	PIC16F54-I/SO	210	18,99	512x12 Flash 12I/O 20MHz SO18
1527011	PIC16F57-I/P	5	33,49	2Kx12 Flash 20I/O 20MHz DIP28
1527012	PIC16F57-I/SO	5	26,99	2Kx12 Flash 20I/O 20MHz SO28
1527013	PIC16F59-I/P	5	40,98	2Kx12 Flash 32I/O 20MHz DIP40
1527014	PIC16F505-I/P	5	31,49	1Kx12 Flash 12I/O 20MHz DIP14
1527015	PIC16F505-I/SL	5	27,49	1Kx12 Flash 12I/O 20MHz SO14 150mil
1529996	PIC16LC54C-04/P	5	60,48	512x12 OTP 12I/O 4MHz DIP18
1530236	PIC16LC54C-04/SO	5	62,47	512x12 OTP 12I/O 4MHz SO18
1530237	PIC16C505-04I/SL	114	51,48	1Kx12 OTP 12I/O 4MHz SO14 150mil

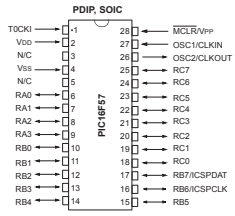

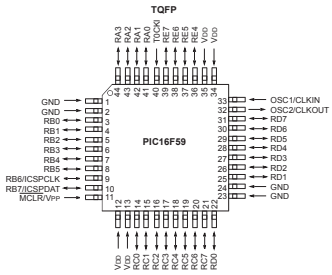

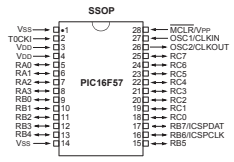

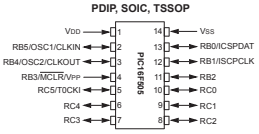

Kompletní nabídka součástek také na internetu!
www.e-soucastky.cz